Cover plate for the concealed WC cistern made by TeCe - Platinum

IMO

12 660 979 Product version from 5/27/2021

Fits: IMO, LULU, MADISON, MEM, TARA, CL.1, LISSÉ, VAIA, META, CYO

- cover plate 150 x 240 x 15 mm
- flush handle with rotary operation and two-volume technology (full flush/partial flush)

This product is compatible with the following TECE products:

- TECEprofil dry wall construction, article numbers:
- 9300300, 9300322, 9300301, 9300344, 9300309, 9300303, 9300388, 9300366, 9300102, 9300103, 9300329, 9300377, 9300378, 9400302, 9400303, 9400304, 9041335, 9041336, 9041337
- TECEbox wet wall construction, article numbers:
- 9370300, 9375300, 9371300

Platinum	12 660 979-08
Chrome	12 660 979-00
Brushed Platinum	12 660 979-06
Dark Chrome	12 660 979-19
Light Gold	12 660 979-26
Brushed Light Gold	12 660 979-27
Brushed Durabrass (23kt Gold)	12 660 979-28
Matte Black	12 660 979-33
Brushed Bronze	12 660 979-42
Brushed Champagne (22kt Gold)	12 660 979-46
Champagne (22kt Gold)	12 660 979-47
Brushed Chrome	12 660 979-93
Brushed Dark Platinum	12 660 979-99

Cover plate for the concealed WC cistern made by TeCe - Platinum

IMO

12 660 979 Product version from 5/27/2021

mm [inches]

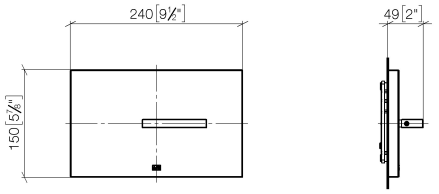

Cover plate for the concealed WC cistern made by TeCe - Platinum

IMO

12 660 979 Product version from 5/27/2021

Parts for other finishes can be found here: Chrome

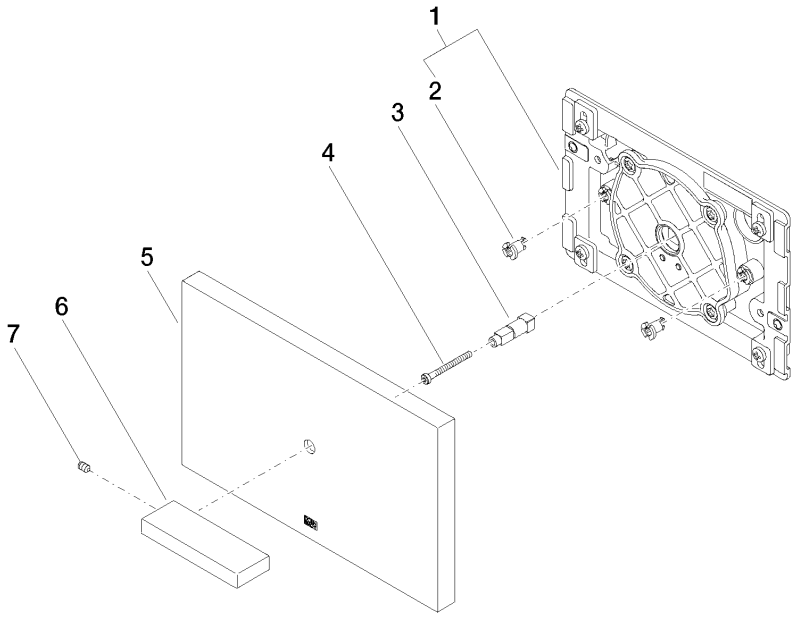

Spare parts list

No.	Item Number	Name	Quantity used	Delivery time
1	04 28 01 053 00 90	plate	1	2
2	90 18 40 295 00 90	sleeve	1	2
3	09 18 20 038 90	base	1	2
4	09 30 30 086 90	screw	1	2
5	09 11 01 179-08	cover	1	-
	Spare part can no longer be ordered, please order the replacement item			
6	09 20 97 057-08	handle	1	40
7	09 31 11 058 90	pin	1	2

We reserve the right to change designs, product range and technical specifications without prior notice.
More information can be found at: www.dornbracht.com +49 (0) 2371 8899 900 mail@dornbracht.com